VL5.950 D
VL5.1200 D

elco

Operating instructions
For authorised specialist engineers
Fuel oil burners

en

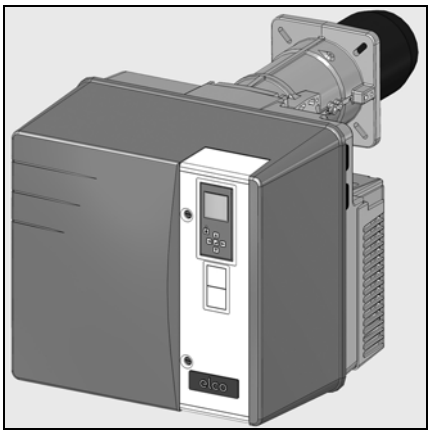

de, fr.....	**4200 1039 2001**
it, nl.....	**4200 1039 2101**
en.....	**4200 1039 2201**

de, fr, it, nl, en..... **4200 1039 1901**

..... **4201 1006 1900**

..... **4200 1059 6700**

05/2015 - Art. Nr. 4200 1039 2201A

Contents

Overview	Contents	2
	Important information	2
	Burner description	3
Operation	Operating mode, safety function	4
	TC control panel	5
	Control unit	6-8
	Terminal allocation chart, connection socket	9-10
	Pump	11
Assembly	Burner assembly	12
	Checking combustion components	13
	Electrical connection	13
Start-up	Checks before commissioning	14
	Setting data, fuel oil connection	14
	Air regulation, fuel oil pressure regulation	15
	Adjusting burner output	16-21
Servicing	Maintenance	22-23
	Troubleshooting	24-25
	Fault diagnosis menu	25
	Operating statistics menu	26-27
	Menu for adjusting screen contrast and brightness settings	27

Important information
VL5.950 D and VL5.1200 D burners are designed for the combustion of extra light domestic fuel oil in accordance with the following national standards:
AT: ÖNORM C1109: standard and low sulphur
BE: NBN T52.716: standard and NBN EN 590: low sulphur
CH: SN 181160-2: standard and low sulphur
DE: DIN 51603-1: standard and low sulphur.
The design and function of the burners meet standard EN 267.
Installation, start-up and maintenance must only be carried out by authorised specialists and all applicable guidelines and regulations must be complied with. This device is not designed for use by individuals (including children) whose physical, sensory, or mental abilities are reduced, or by persons lacking in experience or knowledge, except if they have benefited from supervision or prior instructions concerning the use of the device given by a person responsible for their safety. Children must be supervised to ensure they do not play with the device.

Burner description
VL5.950 D and VL5.1200 D burners are two-stage fully automatic monoblock devices. They are suitable for use with all heat generators complying with standard EN 303 or for use by hot air generators complying with DIN 4794 or DIN 30697 within their respective performance range. Any other type of application requires the approval of ELCO.

Scope of delivery
The burner is supplied packaged in two boxes on a pallet:
- Burner body with operating instructions, wiring diagram.
- Burner head with flange seal and securing screws.

The following standards should be observed in order to ensure safe, environmentally sound and energy-efficient operation:

EN 226
Connection of atomising oil and gas burners with fan to the heat generator

EN 60335-1, -2-102
Safety of electrical equipment for domestic use

Installation location
The burner must not be used in rooms with aggressive vapours (e.g. hair spray, tetrachloroethylene, carbon tetrachloride), high levels of dust or high air humidity (e.g. laundry rooms).
There must be a supply air inlet measuring:
DE: up to 50 kW: 150 cm^2
per additional kW: ; + 2.0 cm^2
CH: QF [kW] x 6= ...cm^2; but 200 cm^2 minimum.
Variations may arise as a result of local regulations.

We accept no responsibility for damage arising from:
- inappropriate use.
- incorrect installation and/or repair on the part of the buyer or any third party, including the fitting of non-original parts.

Final delivery and instructions for use
The firing system fitter must supply the operator of the system with operating and maintenance instructions on or before final delivery. These instructions should be displayed in a prominent location at the point of installation of the heat generator, They should include the address and telephone number of the nearest customer service centre.

Notes for the operator
The system should be inspected by a specialist at least once a year. Depending on the type of installation, shorter maintenance intervals may be necessary! It is advisable to take out a maintenance contract to guarantee regular servicing.

Burner description

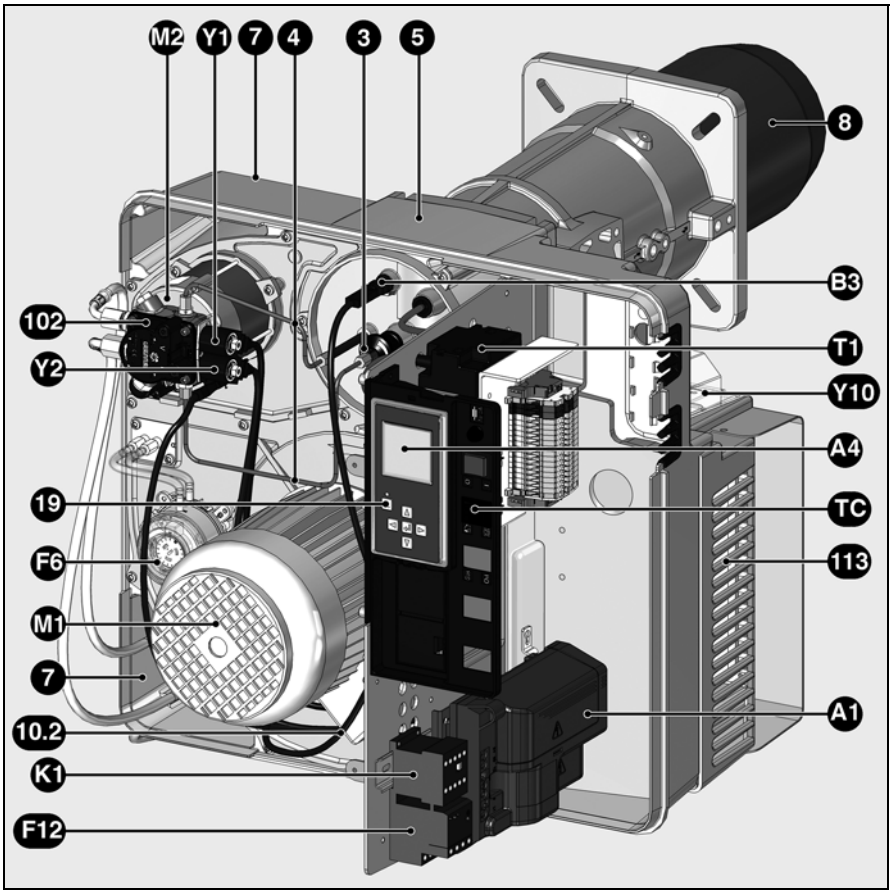

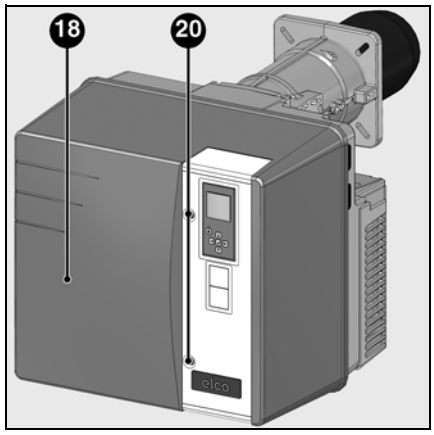

A1 Control and safety unit
A4 Display
B3 Flame detector
F6 Air pressure switch
F12 Thermal relay
K1 Motor/relay
M1 Blower motor
M2 Pump motor
T1 Igniter
TC Control panel
Y1, Y2 Solenoid valves
Y10 Air flap servomotor
3 Adjusting knob for dimension Y
4 Tubes to nozzle line
5 Housing
7 Outlet for the hoses
8 Burner tube
10 Electrical connection (terminal)
18 Cover
19 Release knob
20 Hood securing screw
102 Fuel oil pump
113 Air intake box

Operating mode
Safety function

Starting the burner
- After heat is requested by the boiler regulator, the automatic combustion control unit starts the program sequence.
- The fan motor starts, air pressure is checked.
- Pre-ventilation with air flap open (air flap is only closed when the burner is switched off).
- The pump motor and ignition are switched on.
- The solenoid valve **5** opens, pressure set by the pressure regulator **2**.
- Flame formation.
- Ignition switches off.

Burner operation, regulation between 1st stage and 2nd stage
The burner operates using two nozzles and at a fuel oil pressure for the 2 stages. Fuel oil pressure is regulated by a pressure regulator in the pump.

If an increase in load is requested by the boiler regulator, the burner switches from 1st stage to 2nd stage after a delay of at least 13 seconds.
- Air flap **11** is moved to the 2nd stage position by the servomotor.
- At a certain position of the air flap (adjustable), the solenoid valve for the second nozzles opens.

The air flap continues to move to the 2nd stage position. The 2nd stage is in operation.

Safety function
A safety shutdown is triggered:
- if a flame signal is detected during pre-ventilation (unauthorised flame monitoring),
- if no flame is produced within 5 seconds (safety time) of the burner being started (fuel inlet authorisation),
- if no flame is produced after an unsuccessful restart attempt in the event of flame failure during operation.

A safety shutdown is indicated by the malfunction lamp lighting up. Once the cause of the malfunction has been rectified, it is possible to unlock the control unit by pressing the reset button.

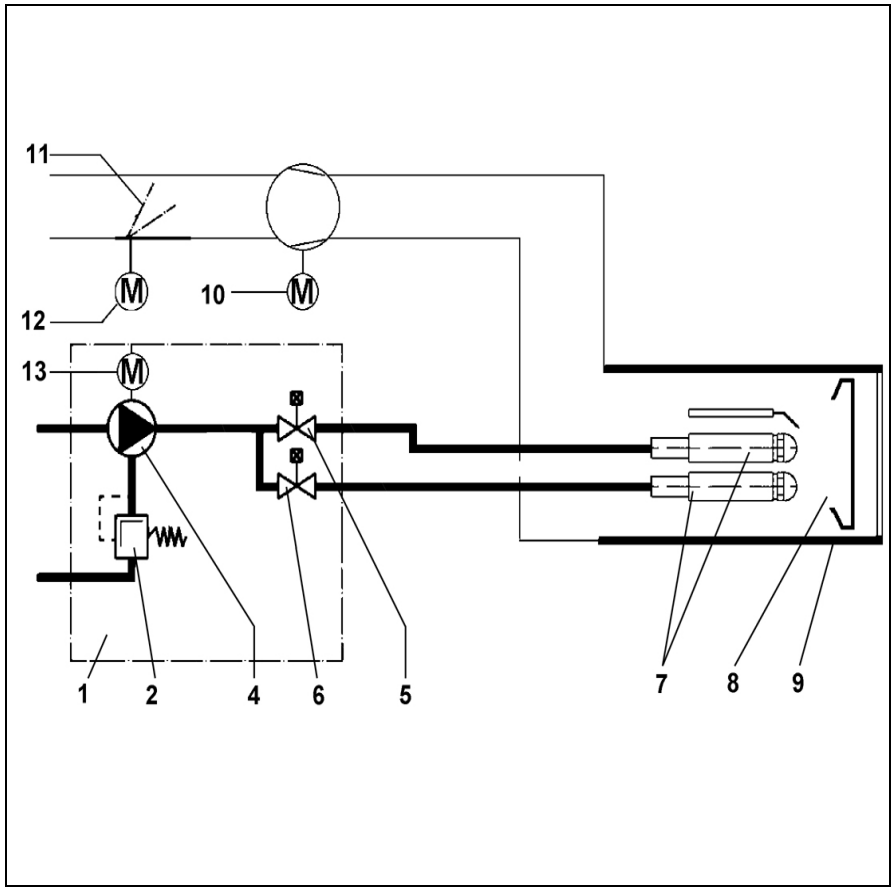

Schematic diagram

1 two-stage pump.
2 Fuel oil pressure regulator (1st and 2nd stage)
4 Pump
5 Magnetic valve (1st stage)
6 Magnetic valve (2nd stage)
7 Nozzle line
8 Baffle plate
9 Flame tube
10 Fan motor
11 Air flap
12 Air flap electric servomotor
13 Pump motor

TC control panel

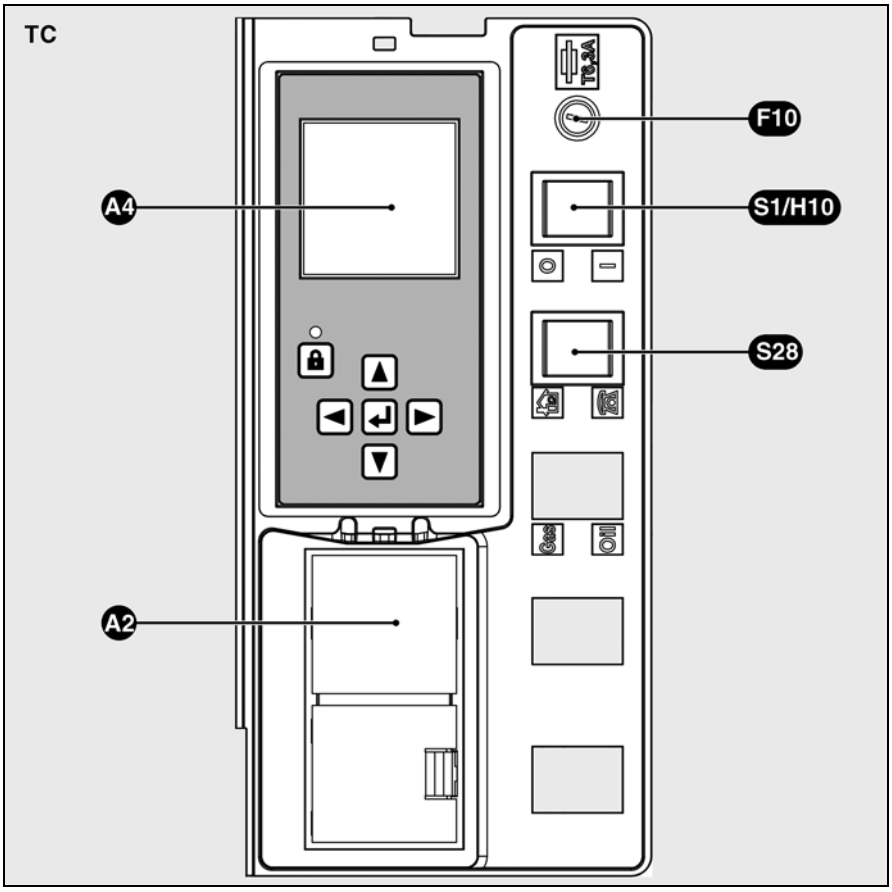

TC control panel
All control elements are visible externally. A transparent removable cover clipped onto the cover provides access to the various controls and control elements and elements used for testing
for setting and operating the burner. The control panel **TC** also includes a bridge for measuring the flame signal, as well as a protective fuse.

To remove the cover, press in one or both sides gently and pull out at the same time.

To replace the cover, locate the two clips at the appropriate openings and push in.

Functions of the TC Control Panel

A2 Standardised installation locations 48x48 or 48x96 mm for the installation of a power regulator (Option)

A4 Display and operating unit

F10 **Control panel** fuse

2-way switch

S1 Main switch for **control panel**
0 Off
1 On
green light **H10** on

S28 Control location selection
Local mode
Remote control mode (optional)

TCH 2xx control unit

The TCH 2xx fuel oil automatic combustion control unit controls and monitors the forced draught burner. The microprocessor-controlled program sequence ensures maximum stability of time periods, regardless of fluctuations in the power supply voltage or the ambient temperature. The automatic combustion control unit is designed to cope with brownouts. Whenever the supply voltage drops below its rated minimum level (< 185V), the control unit shuts down - even in the absence of a malfunction signal. The control unit switches itself back on again once the voltage has returned to normal levels (> 195V).

Pressing and holding the unlocking button for...	… causes …
... 1 second ...	the control unit to unlock.
... 2 seconds ...	the control unit to lock.
... 9 seconds ...	the statistics to be deleted

Locking and unlocking
The control unit can be locked using the release knob or unlocked as long as the unit is powered on.

Always switch off the power supply before installing or removing the control unit. Do not attempt to open or carry out repairs on the control unit.

Moves the cursor upwards.

Moves the cursor downwards.

Increases the marked value.

Modifies/Confirms the value shown.

Modifies/Confirms the value shown.

Unlocks the control unit.

Red LED (flashes if a fault is present).

Screen	Description	Screen	Description
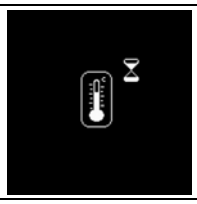	Awaiting the heat request from the boiler		Oil valve is opened, safety time
	Opening the air flap for pre-ventilation.	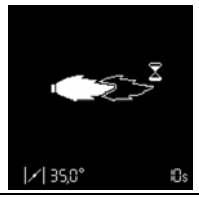	Flame is present, awaiting authorisation of regulation
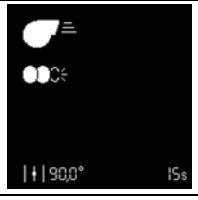	Pre-ventilation and pre-ignition		Burner in operation. The lower cell shows the strength of the signal and the operating time of the burner.
	Air flap closes to the ignition position		

TCH 2xx control unit

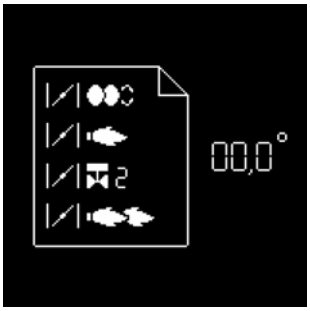

In parallel with its control and safety functions, the TCH2xx control unit allows the following to be set:
- the position of the air flap during ignition
- the position of the air flap during the 1st stage
- the position of the air flap during opening the stage 2 valve (for switching from 1st to 2nd stage)
- the position of the air flap during the 2nd stage
- the position of the air flap during closing the stage 2 valve (for switching from 2nd to 1st stage).

The parameters for the control unit are set using the display and 5 keys. Operating values are shown in real time on the display.

Pressing the keys gives access to 9 menus:

- menu for setting the servomotor

- menu for storing the servomotor setting points in the display

- fault diagnosis menu

- operating statistics menu

- menu for setting/ adjusting the standard configurations*

- menu for setting industrial applications*

- menu for manual control*

- Parameter mode menu*

- Menu for adjusting screen contrast and brightness settings

* In these menus, it is possible to adjust the control unit's standard configurations. These are pre-set in the factory. No modifications may be carried out on-site without prior consultation with ELCO. The access code and the setting setpoints for these menus are available on request.

TCH 2xx control unit

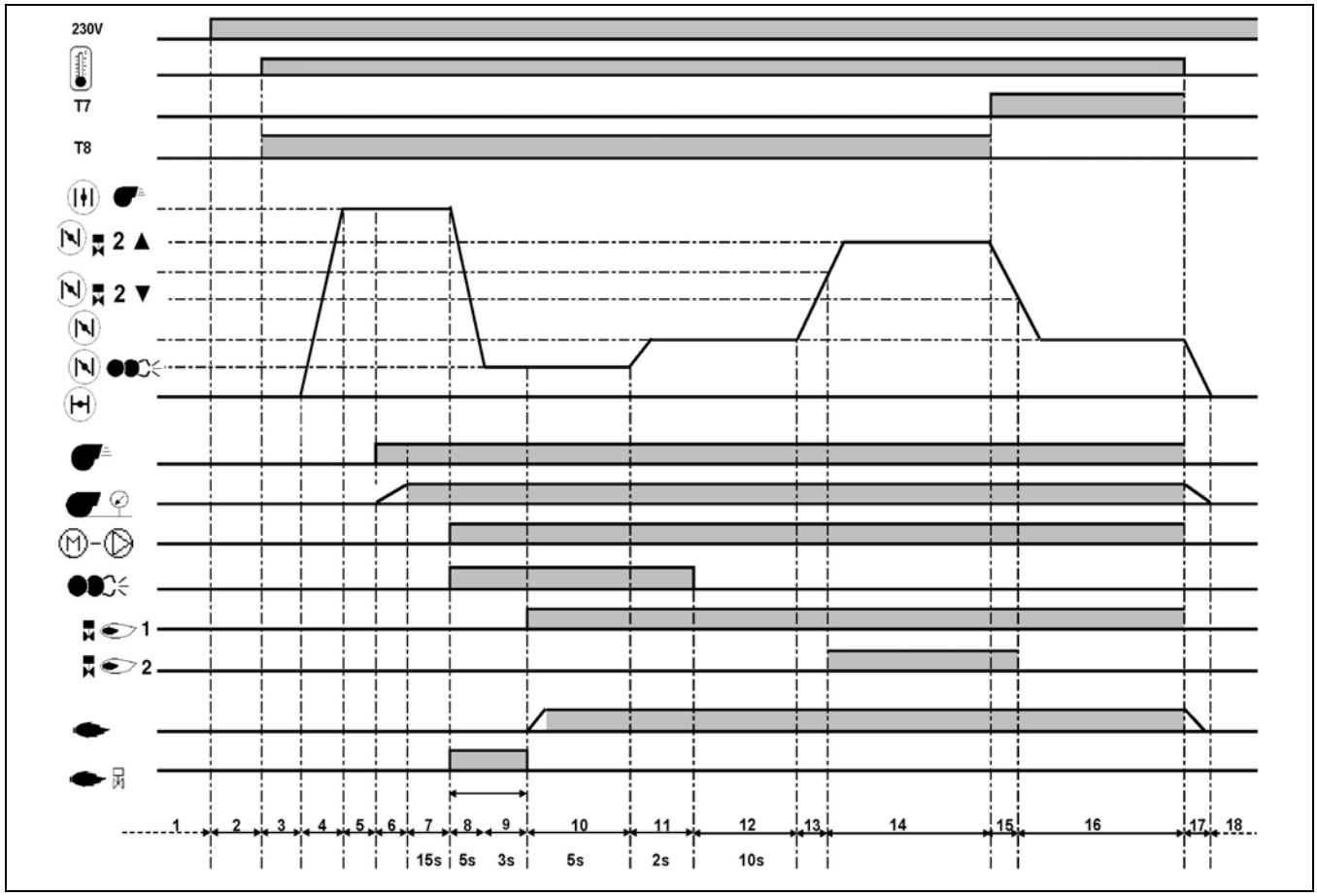

Operating cycle phases:

1: No voltage
2: Powering up, no heat request
3: Heating request
4: Air flap opens to the preventilation position
5: Checking the rest status of the air pressure switch
6: Fan motor switched on, checking air pressure
7: Preventilation
8: Air flap closed, switching to the ignition position, pre-ignition and switching on of pump motor
9: Unauthorised flame monitoring
10: Burner start-up, opening of the solenoid valve, flame formation, safety time
11: Stabilisation time, post-ignition time
12: Awaiting regulator release
13: Opening the air flap, until the opening position of the 2nd stage valve is reached
14: Operation in 2nd stage
15: Closing the air flap, until the closing of the 2nd stage valve
16: Operation in 1st stage
17: Regulator shutdown, closure of the air flap to 0°
18: Awaiting a new heating request

Terminal allocation chart
230 Volt connection

en

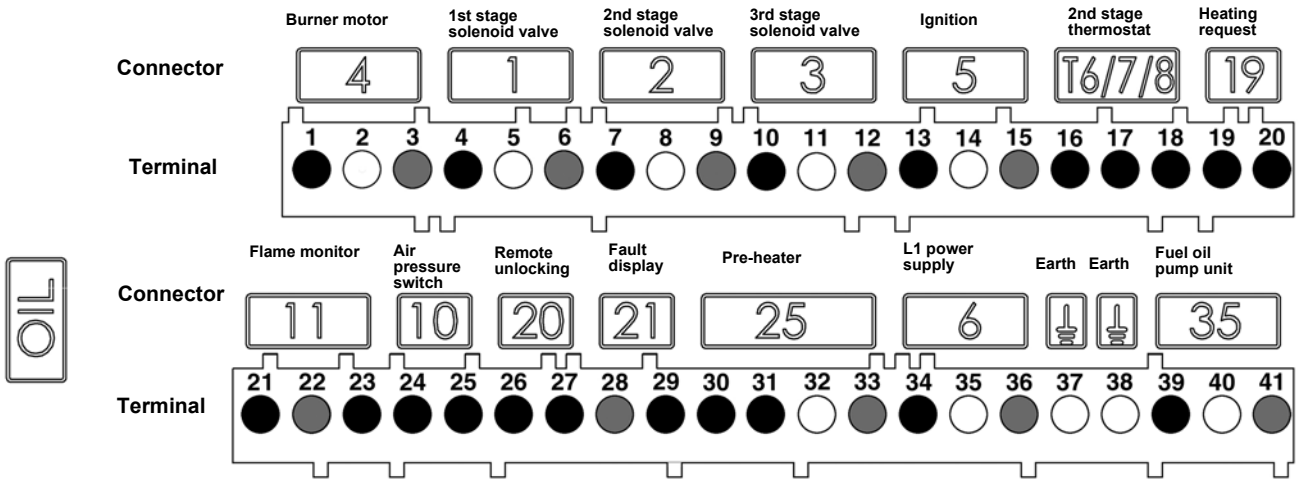

Terminal	Description	Connector
1	Burner motor live	4
2	Earth	
3	Neutral	
4	1st stage solenoid valve live	1
5	Earth	
6	Neutral	
7	2nd stage solenoid valve live	2
8	Earth	
9	Neutral	
10	3rd stage solenoid valve live	3
11	Earth	
12	Neutral	
13	Igniter live	5
14	Earth	
15	Neutral	
16	2nd stage thermostat phase (T6)	T6/7/8
17	Signal T7	
18	Signal T8	
19	1st stage thermostat live (T1)	19
20	Heating request signal (option T2)	

Terminal	Description	Connector
21	Flame monitoring signal	11
22	Neutral	
23	Live	
24	Live	10
25	Signal air pressure switch	
26	Live	20
27	Remote unlocking signal	
28	Neutral	21
29	Signal fault live	
30	Live	25
31	Preheater/release contact	
32	Earth	
33	Neutral	
34	Live L1	6
35	Earth	
36	Neutral	
37	Earth	
38	Earth	
39	Pump unit live	35
40	Earth	
41	Neutral	

Terminal allocation chart
Low voltage connections

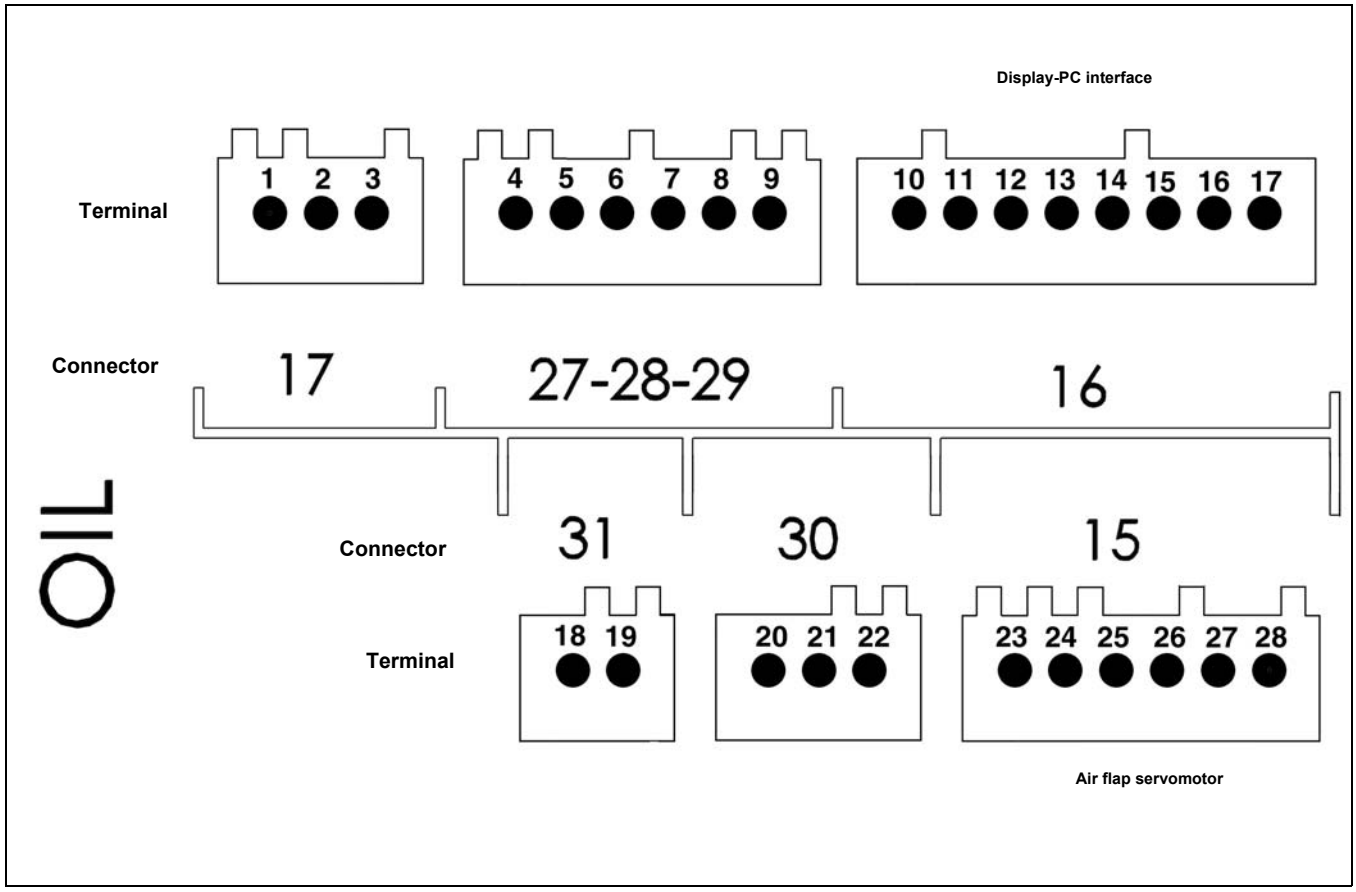

Terminal	Description	Connector
1	Not used	17
2	Not used	
3	Not used	
4	Not used	27 28 29
5	Not used	
6	Not used	
7	Not used	
8	Not used	
9	Not used	
10	Display-PC interface	16
11		
12		
13		
14		
15		
16		
17		

Terminal	Description	Connector
18	Not used	31
19	Not used	
20	Not used	30
21	Not used	
22	Not used	
23	Air flap servomotor	15
24		
25		
26		
27		
28		

Pump

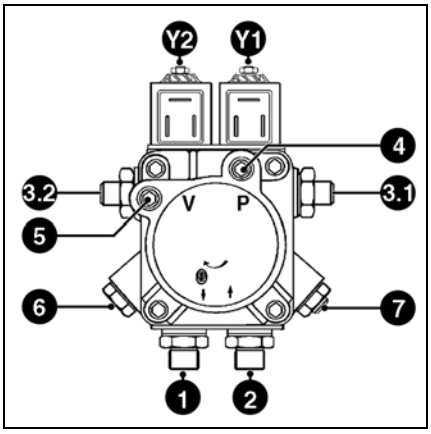

This is a gear pump. It must be connected as a two-line pump via a bleed filter. For the connection of the fuel oil tank and the bleed filter, it is better to use the single line option. There is an intake filter and a fuel oil pressure regulator integrated in the pump. Pressure gauges for pressure measurements **4** and negative pressure measurements **5** must be connected before the equipment is commissioned.

1	Vacuum connection	G 1/4
2	Return connection	G 1/4
3.1	Pump tube connection / 1st stage nozzle line	G 1/8
3.2	Pump tube connection / 2nd stage nozzle line	G 1/8
4.7	Pressure gauge connector	
5	Vacuum gauge connector	
6	Pressure adjustment	
Y1	Solenoid valve, 1st stage	
Y2	Solenoid valve, 2nd stage	

Burner installation

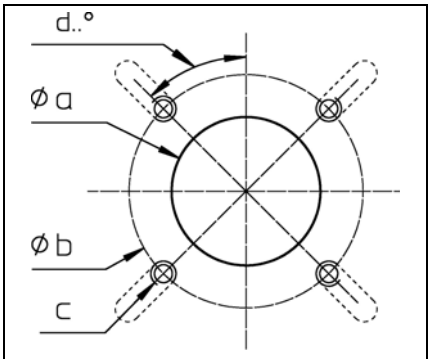

Ø a	Ø b	c	d
195	220-260	M10	45°

Preparing the boiler front
- Prepare the burner mounting plate/ boiler door in accordance with the diagram.
- Establish the internal diameter **a** of 195 mm.
- To mount the burner head bracket, drill four M10 holes (drill diameter 220 to 260 mm) as shown in the diagram opposite.

Burner head assembly
- Screw the bolts into the burner fixing plate/boiler door and position the insulating seal. For a drill hole of < 260 mm, the elongated slots in the gasket should be cut to the required dimensions.
- Remove the combustion components from the head
- Attach the burner head with 4 nuts (**4**)

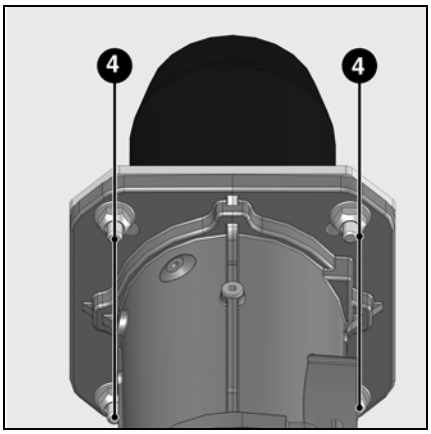

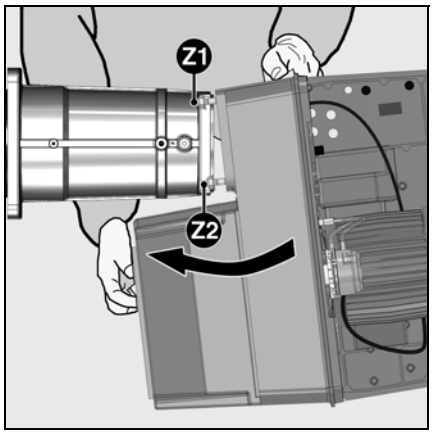

Fitting the burner body
- On the burner body, fully unscrew the two upper nuts **Z1** and remove the two lower nuts **Z2**.
- Place the burner housing sloping diagonally forwards and fit the two upper bolts into the two slots in the burner attachment head.
- Rest the burner body on the spacer and tighten the four nuts.
- If necessary, the body can be fitted with the volute casing upwards. In this case, proceed in the opposite direction to fitting.

The body cannot be positioned in any other way.

⚠ For assembly in the position with the volute facing upwards, unclip the display, turn it over 180°, and refit it.

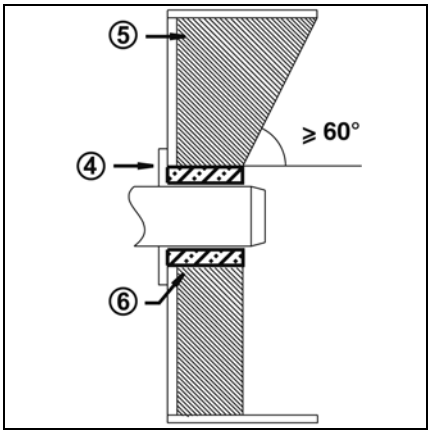

Burner tube installation depth and brickwork surround
Unless otherwise specified by the boiler manufacturer, heat generators without a cooled front wall require brickwork or insulation **5** as shown in the illustration opposite. The brickwork must not protrude beyond the leading edge of the flame tube, and should have a maximum conical angle of 60°. Space **6** must be filled with an elastic, non-flammable insulation material.

Exhaust gas evacuation system
To avoid unpleasant noise emissions, right-angled connectors should not be used on the flue gas side of the boiler.

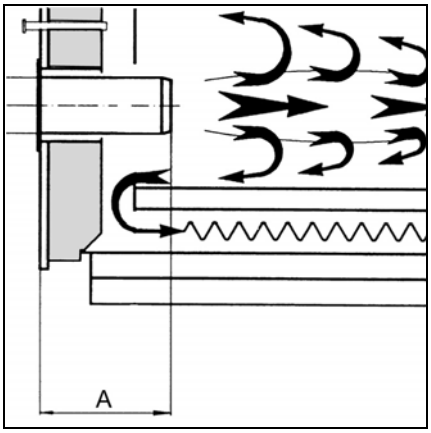

On boilers with reverse firing, minimum flame tube insertion depth **A** should be observed as per the boiler manufacturer's instructions.

Checking the combustion components
Electrical connection

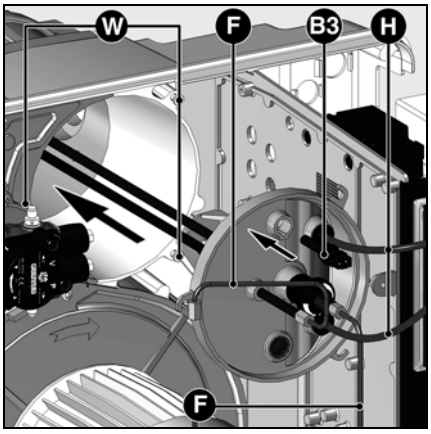

Fitting the combustion components
- Insert the burner head in the flame tube.
- Tighten the three screws **W**.
- Connect the ignition cables **H** to the igniter.
- Fit the preformed tubes **F** between the pump and the nozzle line.
- Fit cell **B3** on the cover.

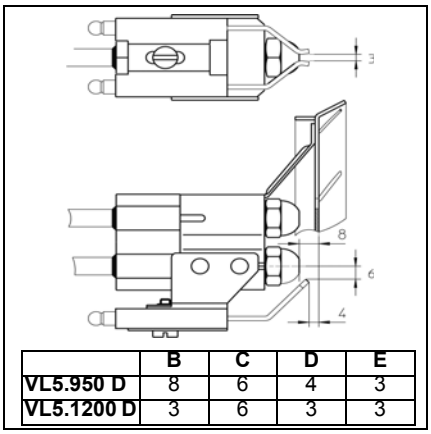

	B	C	D	E
VL5.950 D	8	6	4	3
VL5.1200 D	3	6	3	3

Checking the combustion components
Before installation of the combustion components, the following checks should be performed.
- Check the valve size - where necessary, replace in accordance with the table on page 14.
- Set the ignition electrode block and adjust the flue according to the diagram.
- Check the valve/flue clearance against the diagram and adjust accordingly.

All electrical installation and connection work must only be carried out by a suitably qualified service engineer. The applicable guidelines and directives must be observed, as well as the electrical circuit diagram supplied with the burner.

Electrical connection
- Check to ensure that the power supply is as specified (230V, 50 Hz single-phase current with neutral and earth). Boiler fuse: 6.3A

It must be possible to disconnect the burner from the mains using an omnipolar shutdown device complying with the standards in force.
A device to protect against short circuits must also be fitted upstream of the burner's electrical power supply.
The connection cables for the burner motor and the control voltage are fixed and routed through cable grommets **1** and **2**. They must be connected to the terminal in accordance with the electrical circuit diagram.

To this end, the following conductor cross-sections must be observed:

	Minimum cross-section [mm²]	Maximum cross-section [mm²]
Single-phase power supply (control voltage)	1.5	4
Three-phase power supply (fan motor)	2.5	

Burner motor connection
The burner is supplied for a mains supply voltage of 400V-50Hz, three-phase current with a neutral wire and earthing.
- Check the direction of rotation of the fan motor via manual activation of the burner protection device.

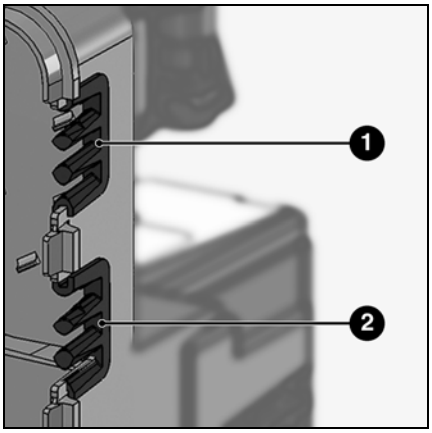

Commissioning

Checks before commissioning
Adjustment data
Fuel oil connection

Checks before commissioning
The following must be checked before initial commissioning:
- That the burner is assembled in accordance with the instructions given here.
- That the burner is pre-set in accordance with the values in the adjustment table.
- Setting the combustion components.
- The heat generator must be ready for operation, and the operating regulations for the heat generator must be observed.
- All electrical connections must be correct.
- That the fan motor turns in the right direction (see arrow on burner housing),
- The heat generator and heating system must be filled with water and the circulating pumps must be in operation.
- The temperature regulator, pressure regulator, low water detectors and any other safety or limiting devices that might be fitted must be connected and operational.
- The exhaust gas duct must be unobstructed and the secondary air system, if available, must be operational.
- An adequate supply of fresh air must be guaranteed.
- A heat dissipation system must be available.
- Fuel storage tanks must be full.
- The fuel supply lines must be assembled correctly, checked for leaks and bled.
- A standard-compliant measuring point must be available for measuring the exhaust gas, the exhaust gas duct up to the measuring point must be free of leaks to prevent anomalies in the measurement results.

Burner	Burner power kW		Fuel-oil flow kg/h		Nozzle 45° or 60°B Gph (Danfoss)		Pump pressure bar		Dimension Y mm	Air flap position in °			
	1. stage	2. stage	1. stage	2. stage	1. stage	2. stage	1. stage	2. stage		Ignition	1. stage	Stage changeover	2. stage
VL5.950 D	300	500	25,3	42,2	5,5	4,5	14,0	13,0	5	10	10	27,5	40
	380	**700**	**32**	**59,0**	**7,5**	**6,5**	**13,0**	**13,0**	**20**	**20**	**20**	**40**	**60**
	540	900	45,5	75,9	10,0	8,5	14,0	13,0	35	30	30	55	80
VL5.1200 D	400	600	34	50,0	7,5	5,0	13,0	12,0	25	20	20	27,5	35
	425	**800**	**36**	**67,5**	**8,5**	**7,5**	**13,0**	**13,0**	**30**	**25**	**25**	**37,5**	**50**
	620	1000	52	85,0	12,0	11,0	13,0	12	40	35	35	55	75
Bold : Delivery setting; 1kg fuel-oil at 10°C = 11.86kWh													

The settings data below are **basic settings**. The factory settings data is highlighted in bold and with a grey background. With a normal case, these settings enable the commissioning of the burner. In all cases, carefully check the settings values. In most cases, according to the installation, corrections must be made.

Fuel oil connection
The fuel oil connection must be made via a bleed filter. The filter must be positioned in such a way as to ensure the hoses are routed correctly. The hoses must not be pinched.
For the maximum values of the suction lengths and heights, see the directive for carrying out and sizing installations with suction.
This directive forms an integral part of the elements ELCO planning is based on. The suction strainer must not be less than 5cm from the bottom of a square tank and not less than 10cm from the bottom of a cylindrical tank.

Fuel oil connection
To ensure the operating safety of the system, the fuel oil supply must be installed carefully in compliance with local regulations.

Important:
- Maximum pressure at the pump intake < 1.5 bar.
- Maximum intake vacuum at the pump < 0.4 bar.
- Connect the hoses to the pump.
- Make sure that the supply and return lines are connected correctly.

⚠ Before commissioning, draw oil in using a hand pump and check the fuel oil lines for leaks.

Air regulation
Fuel oil pressure regulation

Air regulation
Combustion air is regulated at two points:
- on the pressure side, by the gap between the baffle plate and the burner tube.
- on the vacuum side, by the air flap driven by servomotor **Y10.**

Air regulation by air flap
Air is regulated on the vacuum side by an air flap. This is driven by servomotor **Y10**.

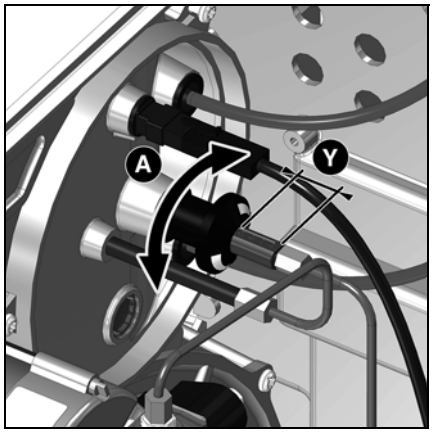

The regulation of air in the burner head affects not only the air flow but also the mixing zone and the air pressure in the burner tube. Rotation of setting screw **A**
- to the right for more air
- to the left for less air
- Adjust dimension **Y** in accordance with the settings table.

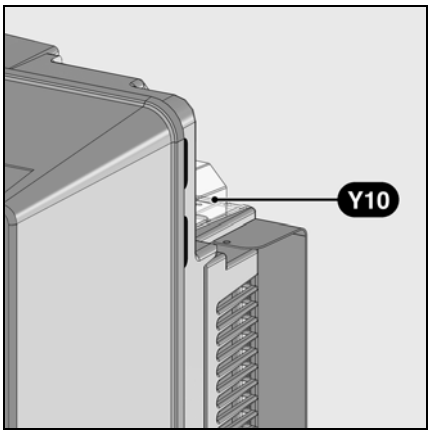

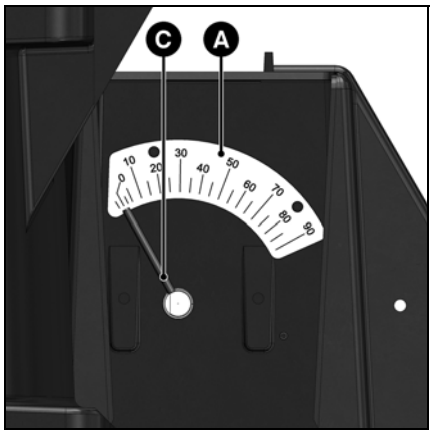

A Scale (0° to 90°) indicating the servo drive setting
C Air flap positioning indicator

Checking the combustion air regulation
The position of the air flap can be read on the **A** scale

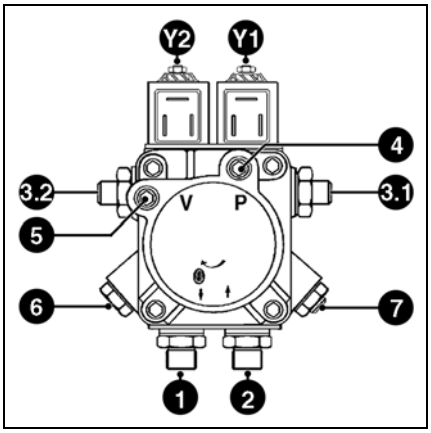

1	Vacuum connection	G 1/4
2	Return connection	G 1/4
3.1	Pump tube connection / 1st stage nozzle line	G 1/8
3.2	Pump tube connection / 2nd stage nozzle line	G 1/8
4.7	Pressure gauge connection	
5	Vacuum gauge connector	
6	Pressure adjustment	
Y1	Solenoid valve, 1st stage	
Y2	Solenoid valve, 2nd stage	

Setting the fuel oil pressure
The fuel oil pressure is adjusted using fuel oil pressure regulator **6** for the 1st stage and for the 2nd stage. To check the pressure, connect a R1/8" pressure gauge to connector **4**.
Turn
- to the right to increase the pressure
- to the left to reduce the pressure

Checking the vacuum pressure
The vacuum meter for checking negative pressure must be connected to point **5**, R1/8". Maximum permissible negative pressure is 0.4 bar. At higher vacuum pressures, the fuel oil gasifies, which causes scraping noises in the pump and risks damaging it.

Pre-setting without flame

Setting is carried out in 2 phases:
- pre-setting without flame
- setting the flame, to fine tune the settings based on the combustion results

• On the control panel: turn on the switches **S1/H10.1 - S28**.

When the burner is switched on, the control unit displays the screen below.

Important
At this point, no setting position for the servomotor has been defined, therefore the burner cannot be started under these conditions.

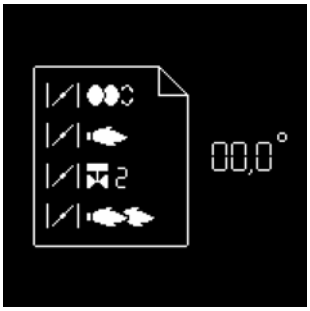

• Press any button and the following screen will appear:

The overview of the menus is displayed, and the air flap positions settings menu is selected.

• Open the settings menu by pressing the ↵ key.

You must now enter the access code (see the label on the back of the display)

• Increase or decrease the value in increments by repeatedly pressing ▼ or ▲.
• When the first figure has been set, move the cursor to the right by pressing ►.
• Repeat the operation until you reach the last figure.
• Confirm the access code by pressing ↵

The control unit then opens the settings mode. The screen displays the factory pre-settings for the different positions of the air flap (here for example: for a VL5.950 D).

The following positions for the air flap are presented:

- ignition position (when the menu is opened, the curser goes to this position)
- position of the air flap during the 1st stage
- position of the air flap when the 2nd stage fuel oil valve is opened
- position of the air flap during the 2nd stage

Modifying a setting value for the servomotor position:
- To modify the value of a position, move the cursor to the corresponding location with the ▲ or ▼ key.
- Select the value to be modified using the ↵ key, the selected value will flash.
- Increase or decrease the value in increments of 0.1° by repeatedly pressing ◄ or ►. For large modifications, press and hold the ◄ or ► key, the value will scroll quickly up or down.
- Confirm the new value using the ↵ key. The value stops flashing.

N.B.:
It is possible to set different positions within a large range of values. However, for safety reasons, the control unit enforces a minimum interval of 2° between the different positions (except between the ignition position and the 1st stage).

Pre-setting without flame
General advice before starting the burner

End of presetting menu without flame

When all the positions of the servomotor have been determined according to the required settings, it is then possible to move on to the next section for commissioning - "Setting the flame".

To do this, place the cursor in the lower part of the screen on the ↵ symbol and confirm by pressing the ↵ key.

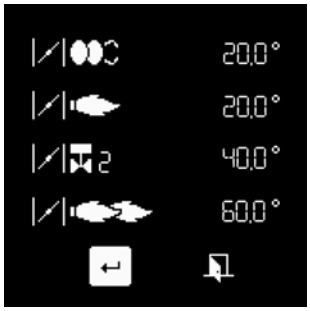

If it is necessary to exit the menu without saving the pre-settings, position the cursor on the symbol and confirm with the ↵ key.

Preparing the burner start-up
Before starting the burner, draw fuel oil in using a hand pump until the filter is completely filled. Then start the burner by switching on the boiler regulator. Open the bleed screw on the oil filter to allow the oil line to bleed fully during the pre-ventilation phase. The negative pressure must not fall below 0.4 bar. Close the bleed screw when the filter is completely filled with fuel oil and fuel oil is flowing out without bubbles.

Optimising combustion values
Optimum combustion values can be achieved by adjusting the position of the baffle plate (dimension **Y**) if necessary. Doing this can have an effect on starting characteristics, pulsation and combustion values. Any reduction in dimension **Y** increases the CO_2 value. However, starting characteristics become harsher.
Compensate for the change in airflow if necessary by adjusting the air flap position.

Warning: To avoid condensation, observe the minimum required flue gas temperature specified by the boiler manufacturer and comply with the requirements for flue gas ducts.

If dimension **Y** needs to be corrected again when the 2nd stage is adjusted, it will be necessary to check the adjustment values for the 1st stage.

⚠ **Risk of deflagration**
Continuously check CO, CO_2 and soot emissions when adjusting the output of the burner. Improve combustion values in the event of CO emissions. The CO level must not exceed 50 ppm.

Function check
Flame monitoring must be checked for safety as part of initial commissioning and also after servicing or if the system has been out of operation for any significant period of time.
- Starting attempt with flame detection cell obscured:
  the control unit must switch to safe mode at the end of the safety time.
- Start-up with the flame detection cell lit: the control and safety unit must switch to safe mode after 10 seconds of pre-ventilation.
- Normal start-up; if the burner is operational, the flame detection cell should be obscured: after restarting and at the end of the safety time, the control and safety unit must switch to safe mode.

Setting the flame

- **If the boiler heating request is not present**, the burner remains on standby.

In this case, it is still possible to return to the previous setting menu "Pre-setting without flame". To do this, position the cursor on the ↻ symbol and confirm with the ↵ key.

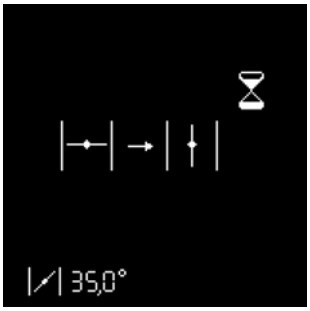

- **If a boiler heating request is present** (T1-T2 contact closed), the burner starts.

The air flap is opened to move to the preventilation position.

Air pressure switch test

Pre-ventilation and pre-ignition

The air flap switches to the ignition position.

The fuel valve opens.

Awaiting flame signal

If no flame is detected at the end of the safety time, the control unit switches to malfunction mode.

If the flame is detected,

flame stabilisation

The control unit awaits the regulation authorisation.

Setting the flame

Setting the 1st stage
If the flame has been detected and stabilised, the control unit sets the burner to the 1st stage as soon as it receives the regulation authorisation.
- Adjust the fuel oil pressure for the 1st stage depending on the required output, using the regulator **6** on the pump. Monitor the combustion values continuously as you do so (CO, CO_2, soot test). If necessary, adjust the dimension **Y** and/or adapt the airflow.

To do this, modify the position of the servomotor in 1st stage. Proceed as described on page 16, in the paragraph **"Modifying the value of a servomotor position setting"**
- Warning: when modifying the setting value, the servomotor will move in real time. As a consequence, the combustion values must be constantly checked.

Special function: ignition checking
If the ignition position has been modified, it is possible to carry out a new burner start-up to check the new ignition position, without having to exit the settings menu.
To do this, after modifying the ignition position, position the cursor on the G symbol, and initiate the new start-up using the ↵ key.

Setting the opening position of the 2nd stage fuel oil valve
After the 1st stage is set, it is possible to set the opening value for the **2nd stage** fuel oil valve. Proceed as described in the paragraph **"Modifying the value of a servomotor position setting"**
- Warning: in this case the servomotor does not move immediately, but first remains in the 1st stage position (the actual position of the servomotor is always displayed in the lower part of the display). The 2nd stage valve also remains closed. Firstly it is possible to modify the position of the 2nd stage air flap.

Setting the 2nd stage
To set the position of the air flap in the 2nd stage, position the cursor on the corresponding line on the display using the button ▼. If necessary, modify the setting value. Proceed as described in the paragraph **"Modifying the value of a servomotor position setting"**.
- To make the burner actually switch to the 2nd stage, press the button ↵ again. The servomotor will then move the air flap to the set position. At the same time, the 2nd stage fuel oil valve will open, as soon as the opening position set for the servomotor is passed. Continuously check the combustion values (CO, CO_2, soot test). If necessary, adjust the dimension **Y** and/or adapt the airflow.

To do this, modify the position of the servomotor in the 2nd stage. Proceed as described on page 16, in the paragraph **"Modifying the value of a servomotor position setting"**
- Warning: when modifying the setting value, the servomotor will move in real time. As a consequence, the combustion values must be constantly checked.

Special function: position the opening and closing of the 2nd stage fuel oil valve differently
The control unit has the possibility of setting the opening of the 2nd stage valve, when the 1st stage changes to the 2nd stage, at a different position to that for closing when the 2nd stage drops to the 1st stage.
- To do this, as described before, first set the opening position of the 2nd stage fuel oil valve.
- Lastly position the cursor on the symbol ⤢ and confirm with the button ↵. The selected symbol will change like this one ⤡.
- Using the button ▲, position the cursor on the setting value of the 2nd stage fuel oil valve, and fix the new closure position, as described in the paragraph "**Modifying the value of a servomotor position setting"**.

Setting the flame
Operating mode

Closing the "Setting the flame" menu
The burner setting is now complete. If necessary, it is possible to again correct each of the settings values. To do this, position the cursor on the value to be modified, using the ▲ or ▼ key.

Otherwise, at all times, the following possible ways of closing the **"Setting the flame"** menu are available:

- Either restart the burner setting procedure, passing through the presetting phase (without entering a password). To do this, position the cursor on the symbol G and confirm with the ↵ key. All the settings values already saved therefore remain available.

- Saving the fixed values and ending the setting procedure. To do this, position the cursor on the symbol and confirm with the ↵ key. The burner is then ready to operate and can now be controlled by the boiler regulation.

- Exiting the settings menu without reaching the end of the setting procedure. To do this, position the cursor on the symbol and confirm with the ↵ key. All the servomotor positions saved up to this point are recovered by calling up the settings menu again.

Operating mode - Display of the operating status, the flame signal and the operating time

After having completed the setting of the burner, it switches to operating mode.

The current operation of the burner (Operation in 1st or 2nd stage) is indicated by the light bar.

The lower cell shows the intensity of the signal. The display range is from 0 µA to 13 µA. A good quality signal is above 3µA.
The following limit values are valid:
- During the unauthorised flame test, the signal must be < 0.7µA
- During the safety time, the signal must be > 1.3µA
- During operation, the signal must be > 1.1µA

The cell at the bottom right displays the current operating time of the burner.

Setting the air pressure switch
Saving the adjustment values in the display

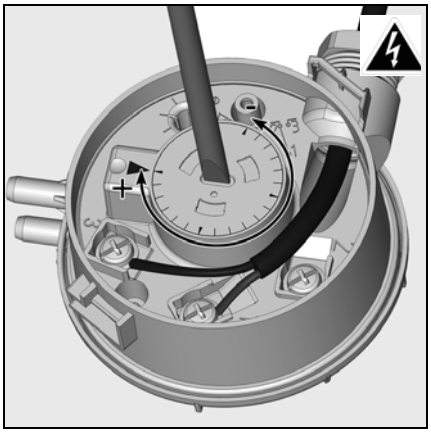

Setting the air pressure switch
- Install a pressure measuring device. To do this, install a T union in the air tube.
- Start the burner running in the 1st stage.
- Set the switch-off point to approximately 15% below the switch-off pressure read.

Saving the adjustment values in the display
If the burner setting procedure has been successfully completed, the servomotor positions for all the operating states will be fixed in the control unit. A back-up copy of the values is therefore stored in the display.
To view these, press the ↵ key, the screen opposite is displayed. Using the ► key, select the menu **"Save adjustment values"** and confirm with the ↵ key.

The screen opposite appears. The adjustment data have been stored in the display.

At this point, it is possible to exit the menu in one of two ways:
- position the cursor on the symbol ↵ and confirm with the button ↵.
- use symbol .

Maintenance

Burner and boiler servicing must only be carried out by a professional heating engineer trained in these operations. The system operator is advised to take out a maintenance contract to guarantee regular servicing. Depending on the type of installation, shorter maintenance intervals may be necessary.

⚠

- **Before carrying out any maintenance and cleaning operations, switch off the mains power supply (control circuit + separate power supply to the motor)**.
- Use original spare parts.

Work recommended as part of annual burner maintenance:

- Burner test run, input measurement in the boiler room
- Clean the combustion components and replace defective parts if necessary
- Clean the fan wheel and blower and check the pump coupling
- Check the fuel oil nozzle, replace if necessary
- Check or replace the fuel oil filters (pump, feed lines)
- Visual inspection of oil hoses, replace if necessary
- Visual inspection of burner electrics, repair any damage if necessary
- Check the burner start characteristics
- Check the oil pressure and vacuum at the burner pump with the burner in operation
- Flame detector and control unit function check
- Correct the adjustment values if necessary
- Draw up a measurement report

General checks

- Emergency stop button function check
- Visual inspection of oil lines in the boiler room

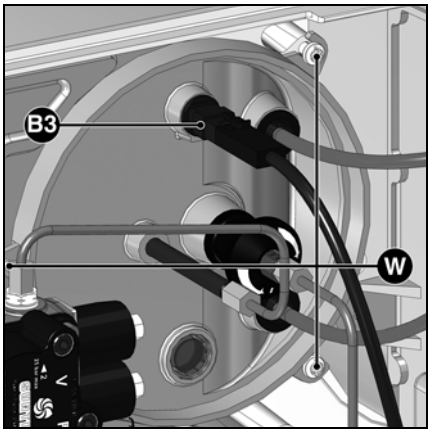

Checking the combustion components

- Remove the burner hood.
- Remove the photoelectric cell **B3** and wipe it with a clean, dry cloth.
- Unscrew the fuel oil tubes.
- Remove the three screws **W** from the cover.
- Remove the combustion components.
- Position the nozzle line in the maintenance position.
- Replace the nozzles.
- Check the ignition electrodes and ignition cables and replace if necessary.
- Clean the baffle plate.
- Check adjustments and settings during assembly.

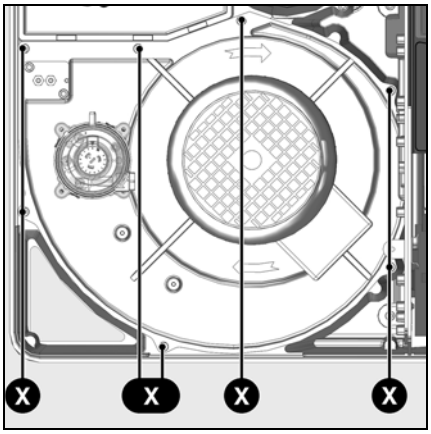

Removing the plate

- Turn off power supply to the motor (4P connector).
- To do this, unscrew but do not remove the 7 screws **X** securing the motor plate.
- Pivot the plate (bayonet system), extract and remove it carefully (without damaging the furnace pressure tap).
- Clean the housing, the volute and the air intake box, and check that there is no damage.
- If necessary, when cleaning, remove the air recycling unit; to do this, remove the 4 screws **Z** and release the recycling unit.

- Clean the ventilation turbine and check it is not damaged.

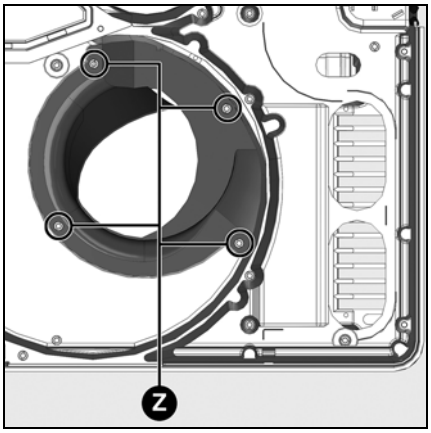

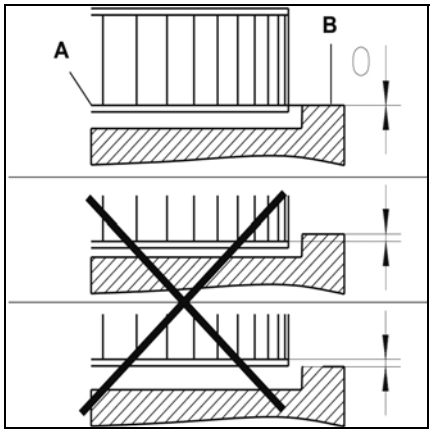

Fitting the fan wheel

When changing the motor or the fan wheel, refer to the positioning diagram opposite. The internal flange A on the fan wheel must be aligned with plate B. Insert a straight edge between the fan wheel blades and bring A and B to the same height. Tighten the cone-point screw on the fan wheel.

Maintenance

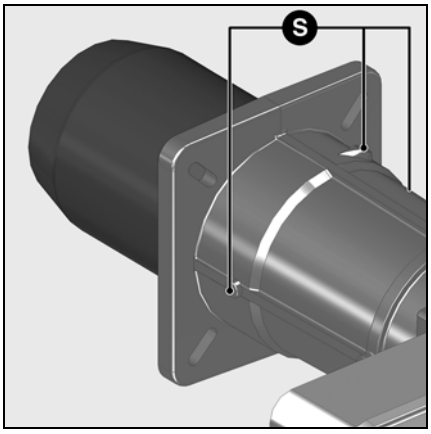

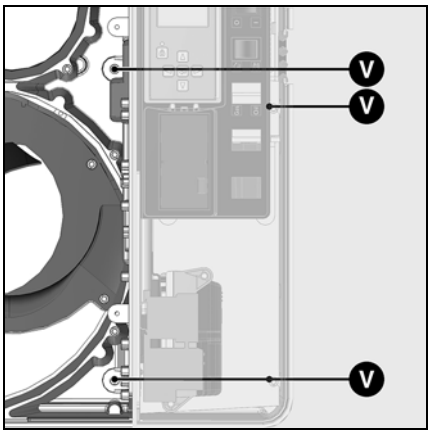

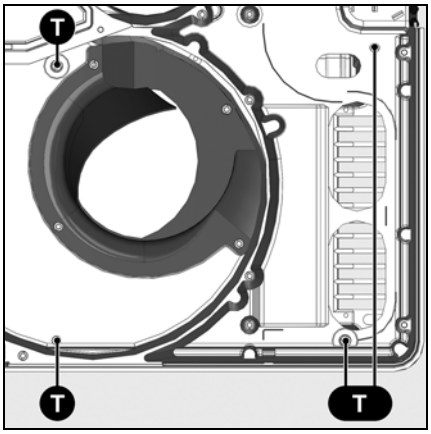

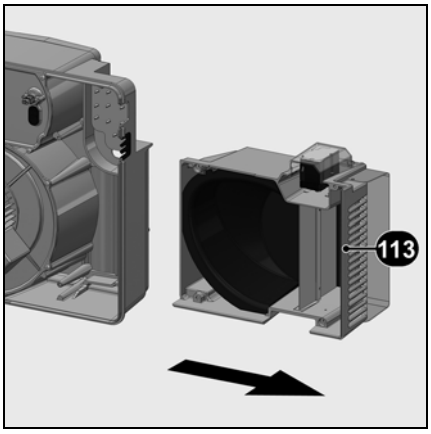

Replacing the flame tube
For this operation, it is necessary to either open the furnace gate or remove the burner.
- **Variant 1 -** Access via the furnace gate
- Remove the burner head
- Loosen the 3 securing screws **S** on the flame tube support by 1 to 2 turns. (Allen 3).
- Open the combustion chamber door.
- Take out the flame tube, check it, clean it and, if it is deformed, replace it.
- Proceed in the reverse order for refitting.
- Fill in the space between the furnace gate and the burner tube with fire-resistant material.
- Close the furnace gate.
- **Variant 2** - Removing the burner
- Remove the burner head.
- Loosen the electrical connections.
- Loosen the burner housing (4 x M10 nuts) and remove. Do not damage electrical cables.
- Unscrew the burner head and then proceed as under variant 1.
- Proceed in the reverse order for refitting.

The flame tube may be hot

Cleaning the pump filter
The filter is located in the pump housing. It must be cleaned with every maintenance service. To do this:
- Close the fuel oil shut-off valve.
- Place a container under the pump to catch the fuel oil.
- Remove the screws **W** and the cover.
- Remove, clean or replace the filter.
- Refit the filter, close the cover again and use a new gasket.
- Tighten securely.
- Open the fuel oil tap again.
- Check pressure and tightness.

Fuel oil valves
The fuel oil valves do not require any special maintenance.
No repairs are allowed, except replacement of coils.
Faulty valves must be replaced by a skilled technician, who will then carry out the sealing, performance and combustion tests again.

Cleaning the air box
- Disassemble the plate (7 screws **X**).
- Disassemble the electric board (4 screws **V**).
- Remove the air intake box **113** (4 screws **T**), clean it and refit it in reverse order.
- Check that the air flap and the servomotor are correctly positioned.

Cleaning the cover
- Do not use abrasive products or products containing chlorine.
- Clean the cover with water and a suitable cleaning product.
- Refit the cover.

Important
Combustion values must be checked under normal operating conditions (boiler room door closed, hood fitted, etc.) after any work is carried out inside the unit. Record the results in the relevant documents.

Checking the flue gas temperature
- Check the flue gas temperature at regular intervals.
- Clean the boiler if the flue gas temperature is more than 30 °C above the value measured at the time of commissioning.
- Use a flue gas temperature gauge to make the check easier.

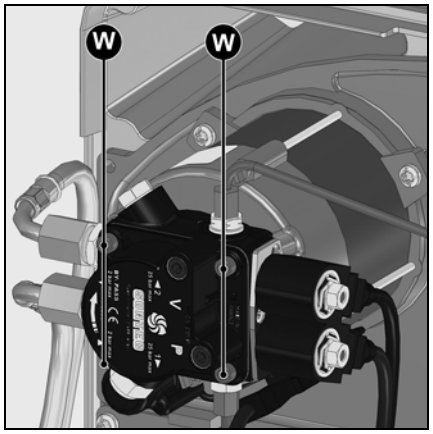

Troubleshooting

Malfunction diagnosis and repair
In the event of a malfunction, first check that the prerequisites for correct operation are fulfilled:

1. Is there any current?
2. Is there fuel oil in the tank?
3. Are all shut-off valves open?
4. Are all control and safety devices, such as the boiler thermostat, low-water detector, limit switch, etc. correctly set?

If the cause of the malfunction cannot be ruled out by the checks described above, check the functions of the various burner components.

It is not permitted to repair any components relevant to safety. These components must be replaced with parts having the same part number.

⚠ **Only use original spare parts. Switch off the power supply before carrying out maintenance or cleaning.**

Combustion values must be checked under normal operating conditions (boiler room door closed, hood fitted, etc.) after any work is carried out inside the unit. Record the results in the relevant documents.

Symbol	Observation	Cause	Corrective action
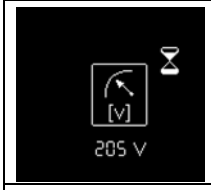	Burner does not start after thermostatic closure. No malfunction indicated on the control and safety unit.	Drop in supply voltage or power failure. Control unit malfunction.	Check the cause of the drop in voltage or the power failure. Replace the control unit.
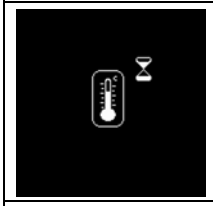	The thermostat no longer starts the burner.	No heat requested by thermostats Defective control unit.	Check/replace the thermostat. Replace the control unit.
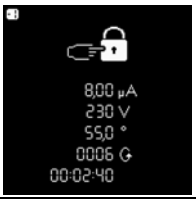	The burner starts up briefly when the power supply is switched on and then stops	The control unit has intentionally been manually locked.	Unlock the unit.
	Burner does not start.	Air pressure switch: not in rest position. Incorrect adjustment Contact welded	 Readjust the pressure switch. Check the wiring. Replace the pressure switch.
	The burner starts then stops after pre-ventilation	Unauthorised flame is detected during the pre-ventilation/pre-ignition period	Check for the ignition spark/adjust the electrodes/ replace Check/replace the fuel oil solenoid valve Checking/replacing the cell

Troubleshooting
Fault diagnosis menu

Symbol	Observation	Cause	Corrective action
	The burner starts and stops after the solenoid valves have opened	No flame at the end of the safety time.	Check fuel oil level in tank. Top tank up as required. Open the valves. Check the fuel oil pressure and the operation of the pump, coupling, filter and solenoid valve. Check the ignition circuit, the electrodes and their settings. Clean the electrodes. Clean and replace the cell.
	Flame failure during operation.	The flame goes out during the operating phase	Replace the following parts as required: ignition electrodes/ignition leads/ igniter/nozzle/pump/solenoid valve/control unit.
	Servomotor fault	Clogging of the air flap Locking of the air flap Internal fault with the servomotor	Replace the servomotor

Fault diagnosis menu
To access the fault diagnosis menu, press any button when the burner is ready for operation, when it is operating, or when it is in malfunction mode. It is impossible to access the fault diagnosis menu during the start-up phase!
The general menu screen will appear. Using the ▲, ▼, ►, or ◄ keys, place the cursor on the fault diagnosis menu symbol, and confirm using the ↵ key.

The details of the last fault to appear are indicated by the flashing symbol. The flame intensity, network voltage, air flap position, number of burner start-ups as well as the operating time of the burner at the time it switched to safe mode are displayed underneath.

Using the ▼ and ▲ keys, it is possible to call up the details of the last 5 faults to have appeared (the fault number is displayed in the upper left corner of the display). After the details of the last 5 faults, the telephone number of the after-sales department as well as the maintenance contract number are shown (no values are entered in the factory).

- Exit the menu using the ↵ key.

Entering a telephone number for the maintenance company and the maintenance contract number
When the following symbol appears on the display:
- Keep the ↵ key held down until the first figure starts to flash (a short press will exit the menu).
- Using the ▲ or ▼ key, change the figure to the required value (underscore = empty field)
- Using the ► key, move on to the next figure.
- When the number is complete, save using the ↵ key.

Operating statistics menu

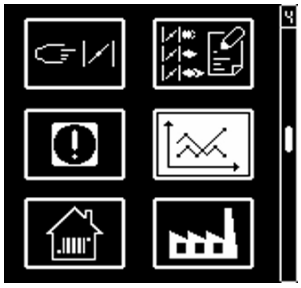

Operating statistics menu
To access the operating statistics menu, press any key, when the burner is ready to operate, when the burner is in operation, or when it is in malfunction mode. It is impossible to access the operating statistics diagnosis menu during the start-up phase.
The general menu screen will appear. Using the ▲, ▼, ►, or ◄ keys, place the cursor on the fault diagnosis menu symbol, and confirm using the ↵ key.
The menu comprises 7 screens. Navigation between the different screens is carried out using the ▲ and ▼ keys.

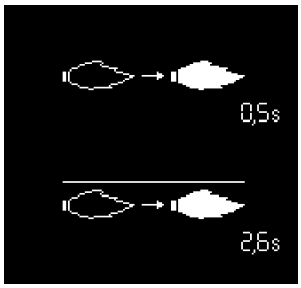

- Flame detection time for last start-up
- Average flame detection time for the last 5 start-ups

- Total number of burner start-ups
- Total number of faults
- Total number of operating hours
- Total number of operating hours in 2nd stage

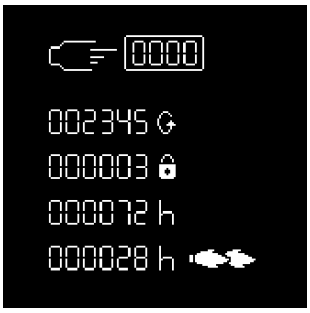

- Total number of burner start-ups since the last meter reset
- Total number of faults since the last meter reset
- Total operating time since the last meter reset
- Total operating time in 2nd stage since the last meter reset

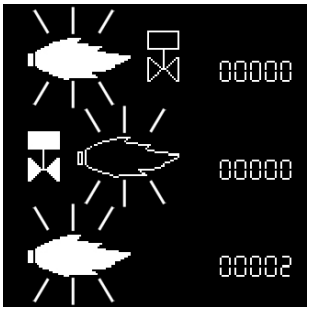

- Number of "unauthorised flame" faults
- Number of "No flame after safety time" faults
- Number of "Flame loss during operation" faults

Operating statistics menu
Menu for adjusting screen contrast and brightness settings

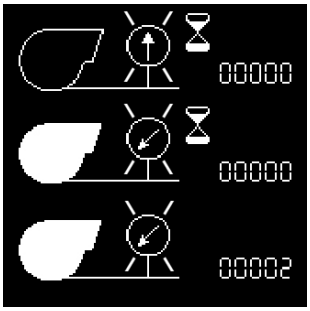

- Number of "Air pressure switch stuck" faults
- Number of "Air pressure switch does not close during operation" faults
- Number of "Air pressure switch switching over" faults

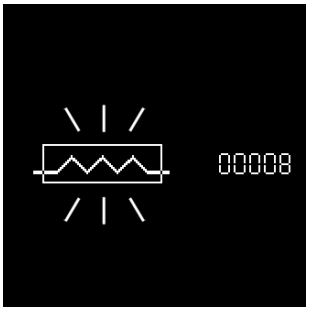

- Number of "fuel oil pre-heater" faults

• Exit the menu using the ↵ key

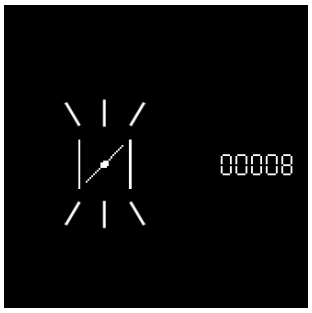

- Number of "servomotor" faults

This menu gives access to the contrast and brightness settings of the display.

The menu can only be accessed when the burner is off, or in operation.
• To display the overview of the menus using the ↵ key, place the cursor on the "screen adjustment" menu and confirm using the ↵ key.

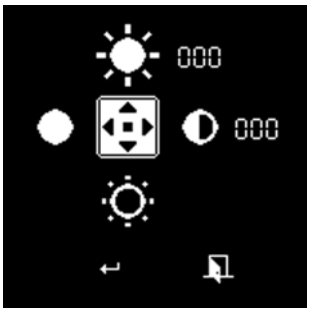

• Modify the settings using keys ◄ and ► for contrast (modification in increments of 2) and keys ▲ and ▼ for brightness (modification in increments of 2).
• To confirm the new setting, move the cursor to the symbol ↵ and confirm by pressing key ↵.

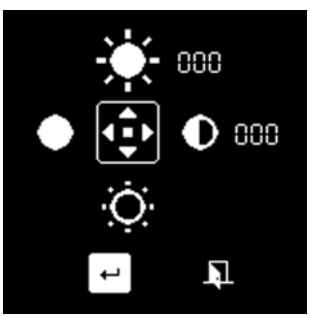

К О Н Т А К Т Ы

Distributor in Russia "Teplopartner" LTD
Russia, Krasnodar city, Stasova street,184, office 4
Tel./fax.: 8 (861) 234 23 83, +7 (961) 854 41 24
www.gorelka-kotel.ru info@gorelka-kotel.ru